REVISIONS		
ISS	SYMBOL	DESCRIPTION\DATE
A1		由BJ-9109-83BGTG004 型號轉來\08/07/06'

REMARK: RoHS COMPLIANT
(符合 RoHS)

FOR CUSTOMER

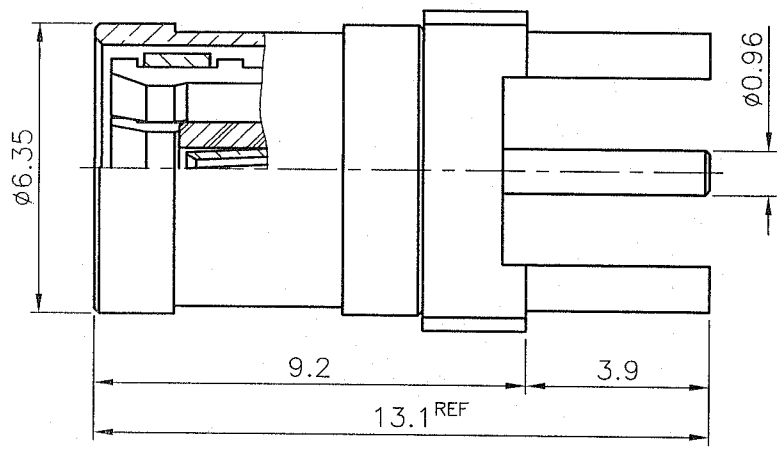

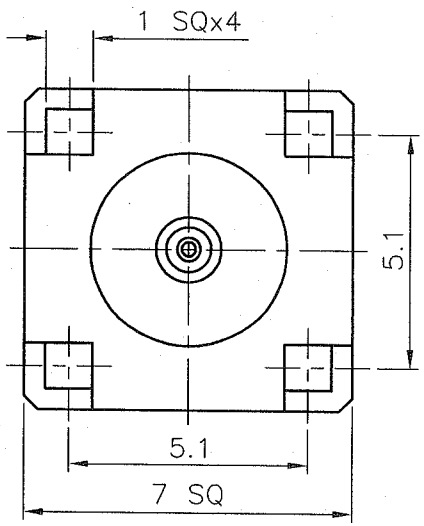

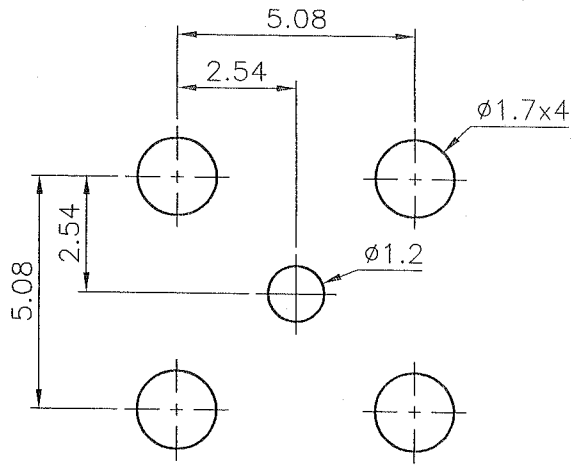

P.C.B. LAYOUT
(印刷電路板配置)

NOTES: FINISH (PLATING THICKNESS IN MICRO-INCHES)
1. BRASS PER QQ-B-626
2. GOLD PL 3 MIN OVER NICKEL PL 70 MIN THICK OVER COPPER STRIKE
3. GOLD PL 30 MIN OVER NICKEL PL 70 MIN THICK OVER COPPER STRIKE
4. TEFLON MIL-P-19468
5. BERYLLIUM COPPER PER QQ-C-530

ISSUE
2009. 1. 20
R&D

NO.	DESCRIPTION	MATERIAL	FINISH	Q'TY	DRAWING NO.
	CONTACT PIN	NOTE 5	NOTE 3		
	INSULATOR	NOTE 4	WHITE		
	SHELL	NOTE 1	NOTE 2		
	C RING	NOTE 5	NONE		
	BODY	NOTE 1	NOTE 2		

DIMENSIONS ARE IN MILLIMETERS

UNLESS OTHERWISE SPECIFIED TOLERANCES
(一般公差)
0.5~6 = ±0.2
>6~30 = ±0.4
>30~120 = ±0.6
>120~315 = ±1
>315~1000 = ±1.6
ANGLES(角度) = ±5°

SCALE	6/1	ISSUE	A1

PART NO.

APPROVED		DATE 08/07/06'
CHECKED		DATE 08/07/06'
DRAWN		DATE 08/07/06'

帛江科技股份有限公司
BO-JIANG TECHNOLOGY CO., LTD.

TITLE
SMB PCB MOUNT PLUG

DRAWING NO. 9115NS502BD000B

FILE NO. Z:\NND\9115\NS\502\000\BDB-A1