REVISIONS		
ISS	SYMBOL	DESCRIPTION\DATE
A1		由BJ-9652-28BGTG-R轉來\08/02/06'

REMARK: RoHS COMPLIANT
(符合 RoHS)

FOR CUSTOMER

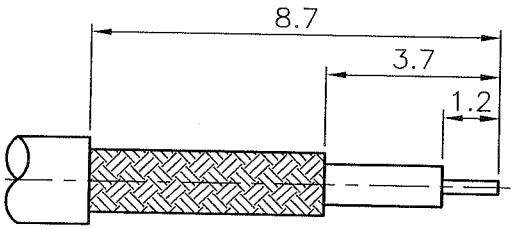

RECOMMENDED
CABLE STRIPPING DIM'S
(建議剝線尺寸)

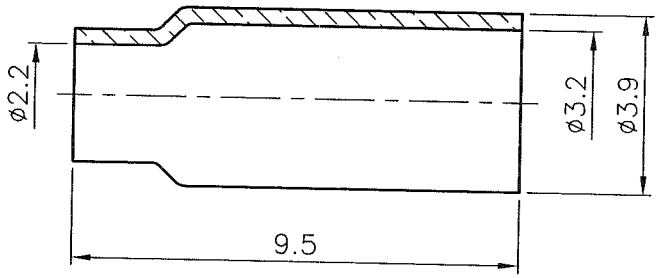

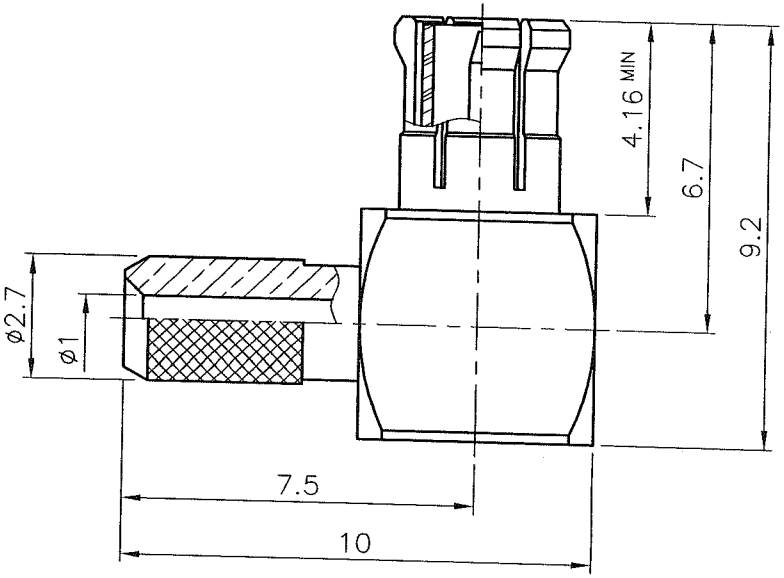

NOTES: FINISH (PLATING THICKNESS IN MICRO-INCHES)
1. BRASS PER QQ-B-626
2. GOLD PL 3 MIN OVER NICKEL PL 70 MIN THICK OVER COPPER STRIKE
3. GOLD PL 30 MIN OVER NICKEL PL 70 MIN THICK OVER COPPER STRIKE
4. TEFLON MIL-P-19468
5. BERYLLIUM COPPER PER QQ-C-530
6. BRASS JIS H 3250, C 2700

1. CRIMPED FERRULE
HEX CRIMP SIZE .128" (3.25mm)
(套管壓著工具)
2. CONTACT PIN TO SOLDER
(中心針銲接)

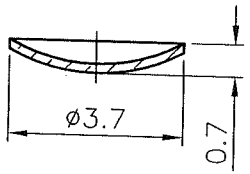

出圖
96.3.01
開發設計部

NO.	DESCRIPTION	MATERIAL	FINISH	Q'TY	DRAWING NO.
	FERRULE	NOTE 6	NOTE 2		
	COVER	NOTE 1	NOTE 2		
	CONTACT BODY	NOTE 5	NOTE 2		
	INSULATOR	NOTE 4	WHITE		
	CONTACT PIN	NOTE 1	NOTE 3		
	CUBE BODY	NOTE 1	NOTE 2		

DIMENSIONS ARE IN MILLIMETERS

UNLESS OTHERWISE SPECIFIED TOLERANCES
(一般公差)
0.5~6 = ±0.2
>6~30 = ±0.4
>30~120 = ±0.6
>120~315 = ±1
>315~1000 = ±1.6
ANGLES(角度) = ±5°

SCALE	6/1	ISSUE	A1

PART NO.

APPROVED DATE 08/02/06'

CHECKED DATE 08/02/06'

DRAWN DATE 08/02/06'

BO-JIANG 帛江科技股份有限公司
BO-JIANG TECHNOLOGY CO., LTD.

TITLE
MCX R/A CRIMP PLUG
(FOR RG-178B/U,196A/U)

DRAWING NO. 9611NR528BD000B

FILE NO. Z:\NND\9611\NR\528\000\BDB-A1